Electrolux PROFESSIONAL

Modular Cooking Range Line thermaline 90 - Full Module Freestanding Gas Fry Top, Mixed Plate, 1 Side, Backsplash, H=700

ITEM #

MODEL #

NAME #

SIS #

AIA #

589551 (MCHFEBHDPO) Gas Fry Top with smooth and ribbed chrome Plate, one-side operated with backsplash

Short Form Specification

Item No.

Unit constructed according to DIN 18860_2 with 20 mm drop nose top and 70 mm recessed plinth. Internal frame for heavy duty sturdiness in stainless steel. 2 mm top in 1.4301 (AISI 304). Flat surface construction, easily cleanable. THERMODUL connection system enables seamless worktop when units are connected and avoids soil penetrating. Chromium-plated mild steel cooking surface with non-stick finishing for optimal grilling. Stainless steel high splash guards on the rear and sides. Features safety thermostat, thermostatic control and led indication of pilot flame. Electrical ignition powered by battery with thermocouple for added safety. Large drain hole allows draining of cooking juices into a large collector. Overheat protection switches off the supply in case of overheating. Metal knobs with embedded hygienic silicon "soft" grip enable easier handling and cleaning.
IPX5 water resistant certification.
Configuration: Freestanding, One-side operated with backsplash.

APPROVAL:

Main Features

- Choice of one or two heating zones. An indicator lamp shows operating state of each zone.
- Large drain hole on cooking surface permits the draining of residual cooking juices into a large collector placed under the cooking surface.
- Overheat protection: the temperature sensor switches off the supply in case of overheating.
- Safety thermostat and thermostatic control.
- Stainless steel high splash guards on the rear and sides of cooking surface.
- Units have separate controls for each half module of the cooking surface.
- All major components may be easily accessed from the front.
- THERMODUL connection system creates a seamless work top when units are connected to each other thus avoiding soil penetrating vital components and facilitating the removal of units in case of replacement or service.
- Metal knobs with embedded hygienic "soft-touch" grip for easier handling and cleaning. The special design of the controls prevents infiltration of liquids or soil into vital components.
- Electrical ignition powered by battery with thermocouple for added safety.
- Led indication of pilot flame
- Large visible digital display manufactured in tempered glass to resist heat and chemicals, showing temperatures or power settings. The display also shows on/off status of the appliance and on/off status of the heating elements.

Construction

- 2 mm top in 1.4301 (AISI 304).
- Unit constructed according to DIN 18860_2 with 20 mm drop nose top and 70 mm recessed plinth.
- Flat surface construction with minimal hidden areas to easily clean all surfaces
- Cooking surface in chromium-plated mild steel with non-stick finishing for optimum grilling results.
- IPx4 water protection.
- Internal frame for heavy duty sturdiness in stainless steel.
- Cooking surface 2/3 smooth and 1/3 ribbed.

Optional Accessories

- Connecting rail kit for appliances with backsplash, 900mm — PNC 912499 ❑
- Portioning shelf, 800mm width — PNC 912526 ❑
- Portioning shelf, 800mm width — PNC 912556 ❑
- Folding shelf, 300x900mm — PNC 912581 ❑
- Folding shelf, 400x900mm — PNC 912582 ❑
- Fixed side shelf, 200x900mm — PNC 912589 ❑
- Fixed side shelf, 300x900mm — PNC 912590 ❑
- Fixed side shelf, 400x900mm — PNC 912591 ❑
- Stainless steel front kicking strip, 800mm width — PNC 912634 ❑
- Stainless steel side kicking strips left and right, against the wall, 900mm width — PNC 912660 ❑
- Stainless steel side kicking strip left and right, back-to-back, 1810mm width — PNC 912663 ❑
- Stainless steel plinth, against wall, 800mm width — PNC 912939 ❑
- Connecting rail kit for appliances with backsplash: modular 90 (on the left) to ProThermetic tilting (on the right), ProThermetic stationary (on the left) to ProThermetic tilting (on the right) — PNC 912981 ❑
- Connecting rail kit for appliances with backsplash: modular 90 (on the right) to ProThermetic tilting (on the left), ProThermetic stationary (on the right) to ProThermetic tilting (on the left) — PNC 912982 ❑
- Back panel, 800x700mm, for units with backsplash — PNC 913013 ❑
- Stainless steel panel, 900x700mm, against wall, left side — PNC 913101 ❑
- Stainless steel panel, 900x700mm, against wall, right side — PNC 913105 ❑
- Endrail kit, flush-fitting, with backsplash, left — PNC 913117 ❑
- Endrail kit, flush-fitting, with backsplash, right — PNC 913118 ❑
- Scraper for smooth plates — PNC 913119 ❑
- Scraper for ribbed plates — PNC 913120 ❑
- Endrail kit (12.5mm) for thermaline 90 units with backsplash, left — PNC 913208 ❑
- Endrail kit (12.5mm) for thermaline 90 units with backsplash, right — PNC 913209 ❑
- U-clamping rail for back-to-back installations with backsplash (to be ordered as S-code) — PNC 913226 ❑
- Insert profile d=900 — PNC 913232 ❑
- Perforated shelf for warming cabinets and cupboard bases (one-side operated TL80-85-90 and two-side operated for TL80) — PNC 913234 ❑
- Side reinforced panel only in combination with side shelf, for against the wall installations, left — PNC 913267 ❑
- Side reinforced panel only in combination with side shelf, for against the wall installations, right — PNC 913269 ❑
- Shelf fixation for TL80-85-90 one-side operated, TL80 two-side operated — PNC 913281 ❑
- Stainless steel dividing panel, 900x700mm, (it should only be used between Electrolux Professional thermaline Modular 90 and thermaline C90) — PNC 913672 ❑
- Stainless steel side panel, 900x700mm, flush-fitting (it should only be used against the wall, against a niche and in between Electrolux Professional thermaline and ProThermetic appliances and external appliances - provided that these have at least the same dimensions) — PNC 913688 ❑

Recommended Detergents

- C41 HI-TEMP RAPID DEGREASER, 1 pack of six 1 lt. bottles (trigger incl.) — PNC 0S2292 ❑

Electrolux PROFESSIONAL

Modular Cooking Range Line thermaline 90 - Full Module Freestanding Gas Fry Top, Mixed Plate, 1 Side, Backsplash, H=700

Front

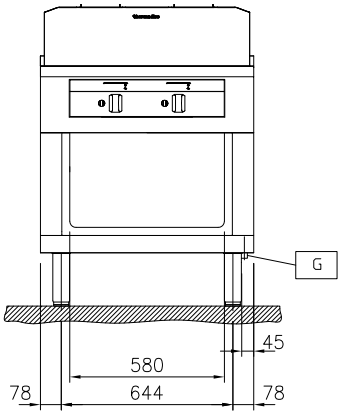

Side

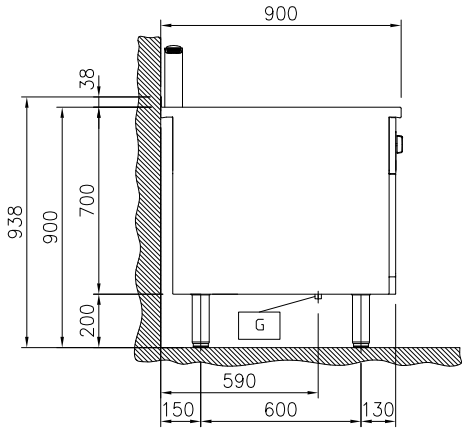

EQ = Equipotential screw
G = Gas connection

Top

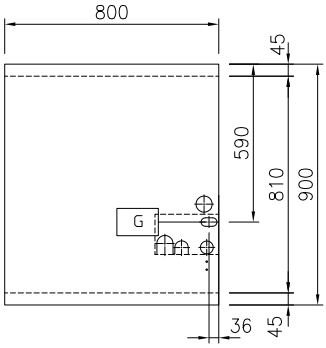

Gas

Gas Power:	20 kW
Gas Type Option:	
Gas Inlet:	1/2"

Key Information:

Cooking Surface Depth:	615 mm
Cooking Surface Width:	700 mm
Working Temperature MIN:	110 °C
Working Temperature MAX:	270 °C
External dimensions, Width:	800 mm
External dimensions, Depth:	900 mm
External dimensions, Height:	700 mm
Storage Cavity Dimensions (width):	580 mm
Storage Cavity Dimensions (height):	330 mm
Storage Cavity Dimensions (depth):	740 mm
Net weight:	150 kg
Configuration:	On Base;One-Side Operated
Cooking surface type:	half ribbed/ half smooth
Cooking surface - material:	Chromium Plated mild steel mirror

The company reserves the right to make modifications to the products without prior notice. All information correct at time of printing.

2026.06.25